WELLSTREAM DESANDER

Cyclonic 'High Efficiency' Solids Separation Downstream of Choke

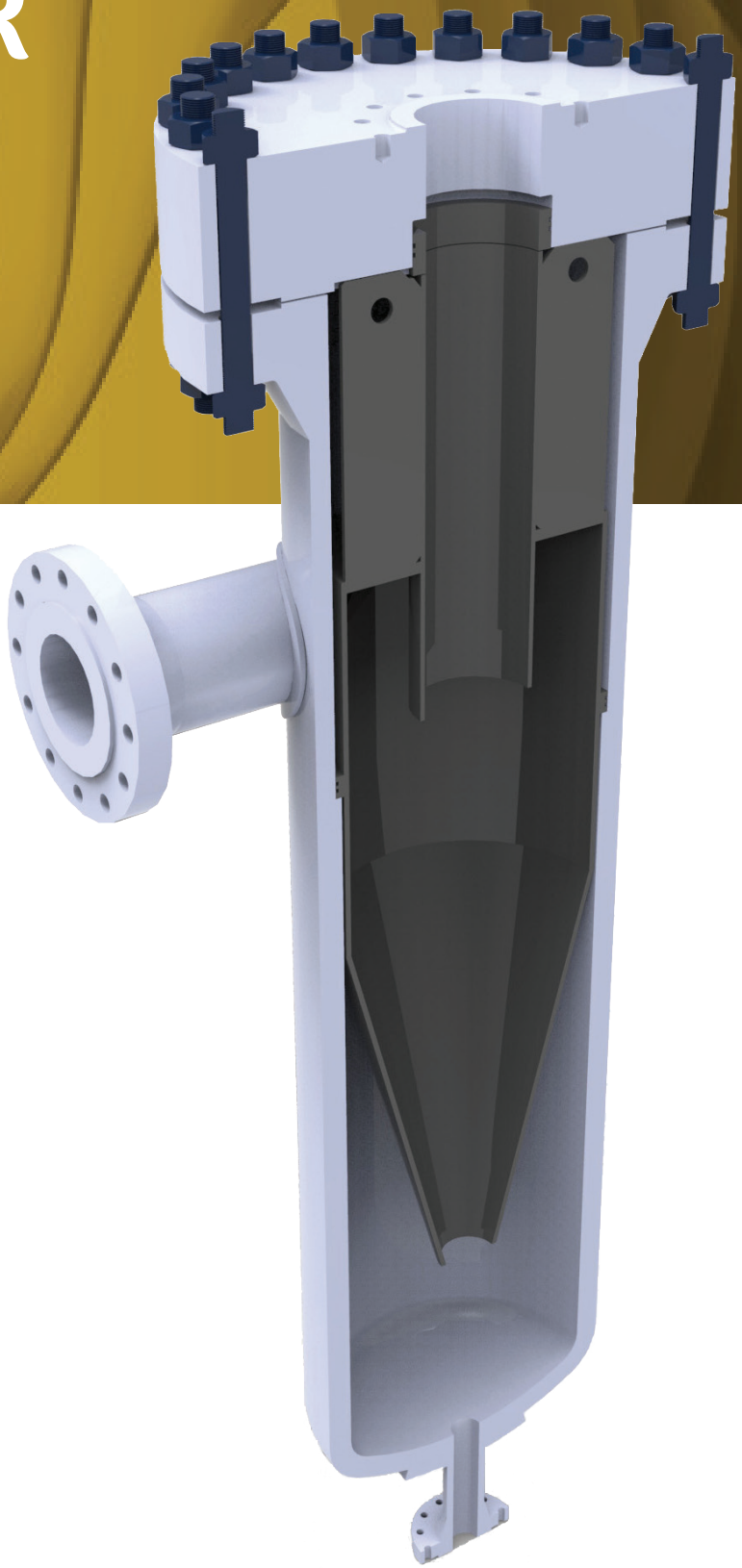

A WELLSTREAM DESANDER BY ePROCESS IS A CYCLONE BASED PROCESS SYSTEM, PROVIDING THE MOST EFFICIENT SOLUTION FOR THE SEPARATION AND REMOVAL OF SOLIDS FROM MULTI-PHASE FLUIDS BEORE THE PRODUCTION SEPARATOR.

eProcess Wellstream Desander cyclones are pressure drop dependent, where multiphase fluids are directed into the cyclone causing the fluids and particles to spin under a centrifugal force. These strong forces cause the solids and fluids to separate.

Gas in particular, disengages and separates quickly. The heavier solids are forced outward toward the cyclone wall, and the lighter fluids and gas phase migrate in the opposite direction toward a centre core.

Solids spiral down the cyclone to the underflow outlet, while the remaining fluids are forced in the opposite direction to the overflow. The process is a simple and effective separator, with a 2-3 second residence time, and no moving parts.

eProcess TECHNOLOGIES

WELLSTREAM DESANDER

Production of sand & solids from oil & gas wells is a flow assurance issue for processing facilities. It's often caused by unconsolidated reservoirs, high production rates, or the failure of gravel packs and other sand control measures.

Detrimental effects of sand production include mechanical damage and erosion to chokes, flow lines, control valves, pumps and other equipment; decreased separator capacity due to reduced residence time; partial blockage of pipelines, and high environmental discharge costs.

Solids handling is an increasingly important task, and an efficient process dealing with the problem needs to address the effective removal of all solids from multiphase flows, upstream or downstream of the choke.

APPLICATIONS

- Wellstream Sand removal after the Choke;
- Production manifold sand removal;
- Removal of solids upstream of production separator or FWKO;
- ASME Design Basis: typically 150# – 1500# rating.

BENEFITS

- No moving parts, low maintenance and reduced downtime, result in significant capital and operating cost savings;
- Compact; 10% the size and weight of conventional filter systems; ease of mobilisation;
- Activates oil and gas wells previously shut-in due to excessive sand production;
- Eliminates solids erosion on downstream pipework, valves, chokes, and process vessels;
- Provides solids removal prior to oil contamination and eliminates sludge formation and other difficult solids accumulation problems.

OPERATIONS

- Wellstream Desanders are available in several sizes, separating 98% of particles from 5 to 50 microns and larger, and up to 99% by weight;
- Operating pressure drop requirements vary from 10 to 60 psi, with the larger units handling solids volumes of up to 20% and the smaller units handling up to 1-2% by volume.

STORAGE & TRANSPORTATON

- Solids are typically collected into dedicated secondary accumulator vessels. For high operating pressures, these are also used to prevent high quantities of gas flashing to atmosphere during the purge cycle;
- To ensure liquids content in the final batch are minimised, water is reduced by the use of overflow tank designs. The solids remain, and the water is collected and pumped to a slops tank. The final sand slurry is typically > 80% solids by volume;
- The collected solids are removed either by tank replacement, or by vacuum truck operation.

AUS | SIN | USA | UAE | UK
www.eprocess-tech.com • sales@eprocess-tech.com

Advancing Separation Solutions

eProcess TECHNOLOGIES